MATRIX 3D
Vibration Tables

MB DYNAMICS
Sound & Vibration Testing Technology

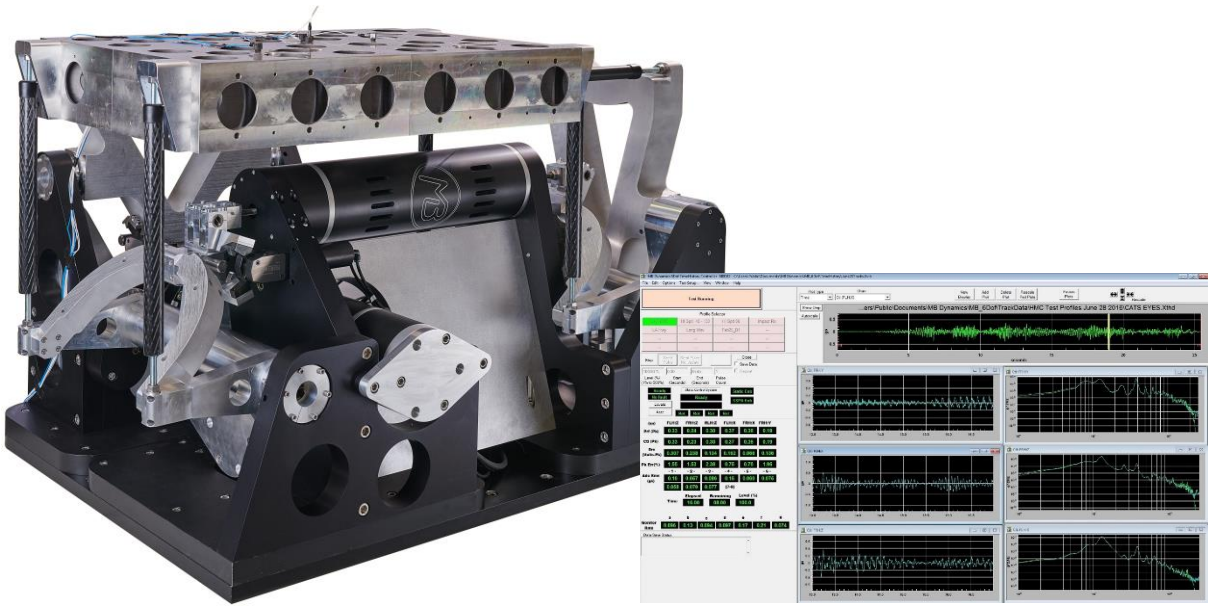

Compact, quiet 3D vibration tables in three different sizes and performance classes for simultaneous or sequential excitation in x, y and z-axis

In the real world, parts and components are excited in multiple axes simultaneously, e.g. by the resulting vibration and motion of a vehicle when driving over different road surfaces. However, for cost reasons, excitation in vibration and squeak & rattle testing in the laboratory is often reduced to single axis excitation in z-axis only or it is performed sequentially in x-, y- and z-axis. Real load scenarios and noise-critical excitation states are therefore only simulated to a limited extent. The changeover to different excitation directions is usually quite time-consuming. Our compact and quiet 3D vibration tables allow simultaneous excitation in x-, y- and z-axis. Real excitation and load scenarios can thus be simulated exactly in a single test in multiple axes. Extensive conversion work for excitation of individual axes is no longer necessary.

Features & Benefits:

- Quiet & compact 3D vibration tables in three different sizes and performance classes
- Vibration tables from 600mm*900mm up to 1800mm*900mm (special sizes on request)
- Simultaneous excitation in x-, y- and z-axis OR sequential excitation of individual axes
- Excitation by means of quiet electrodynamic ***ALPHA*** shaker systems
- Max. excitation forces from 2000N to 8000N
- Vibration displacement of 25mmpk-pk in all axes
- Frequency range DC to 200Hz
- Synchronous excitation and guidance of the vibration table minimizes uncontrolled cross-axis responses and pitch & roll motions
- High efficiency and low power consumption
- Robust design, low maintenance, reliable and durable

Typical applications:

- Squeak & Rattle testing on small, medium and large components
- Functional tests on optical systems (e.g. Head-Up displays)
- Durability testing with and without climatic superpositions

Options/ Accessories:

- Water cooling for ALPHA shakers
- Climate option for use within climate chamber (-30°C to +80°C)
- Climate barrier for interfacing the vibration table to a climate chamber
- Test sequence controller for fully automated execution of predefined test sequences
- BSR SUITE measurement system for objective evaluation of Buzzes, Squeaks & Rattles

MATRIX 3D
Vibration Tables

MB DYNAMICS
Sound & Vibration Testing Technology

ALPHA shakers enable compact design and low operating noise

The excitation of the three axes is performed by extremely compact and very quiet ***ALPHA*** shakers. The robust, low-maintenance design, the noise- and friction-free bearing of the moving axis and the high linearity of these electrodynamic shakers create the basis for reliable and quiet operation and exact reproduction of the excitation signals in x, y and z-axis. Excitation forces of up to 8kN and a maximum vibration displacement of 25mm allow universal use of the ***MATRIX*** vibration tables for squeak & rattle, functional and durability tests.

Figure 1: ALPHA 4050 (left) and ALPHA 2025 shaker (right) with connectors and integrated quiet fans on the back.

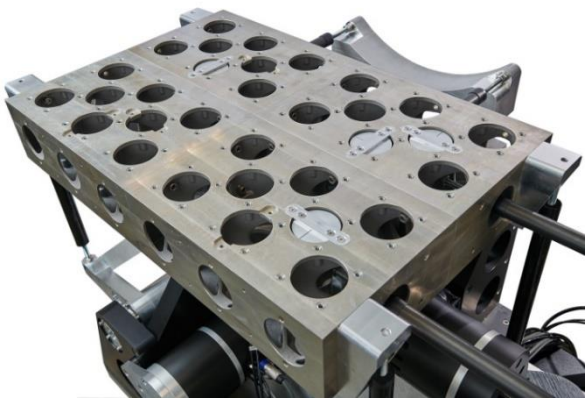

Figure 2: Magnesium honeycomb structure allows the design of rigid, lightweight vibration tables

Vibration tables made of stiff magnesium honeycomb structure

A magnesium honeycomb structure enables the construction of high-strength, rigid and lightweight vibration tables in various sizes from 900mm*450mm to 1800mm*900mm. Weight and radiation surface are minimized by the honeycomb structure, resulting in higher maximum accelerations and minimum operating noise of the ***MATRIX 3D*** vibration tables. For flexible mounting of different test specimens and test fixtures, all vibration tables are equipped with M8 threaded inserts on a 75mm*75mm grid pattern.

Minimization of uncontrolled cross-axis responses

A soft suspension of the mounting table, e.g. by air springs without additional guidance, often leads to uncontrollable cross-axis responses as well as uncontrolled pitch, roll and yar motions which differ depending on the center of gravity, the position of the test object on the mounting table and the excitation signals. Therefore, guiding and transmission arms ensure synchronous excitation and forced guidance of our MATRIX 3D vibration tables and ensure a controlled and reproducible excitation of the item under test. Testing, not estimating!

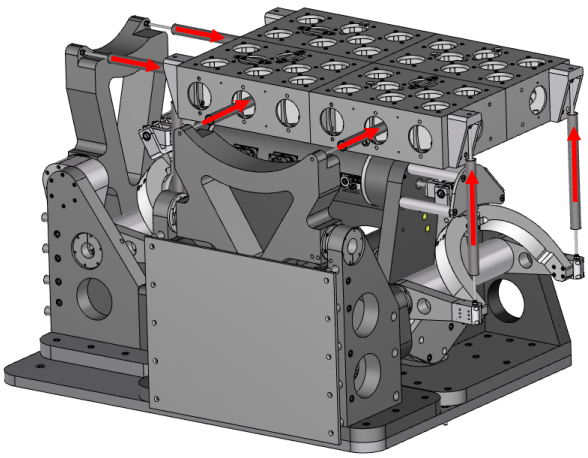

Figure 3: Guide and transmission arms ensure synchronous excitation and guidance of the magnesium mounting table in all three excitation axes.

MATRIX 3D
Vibration Tables

MB DYNAMICS
Sound & Vibration Testing Technology

Multi-Axis vibration control system

Control of the three excitation axes by a closed-loop multi-axis (MIMO) vibration control system allows reproducible excitation in one, two or three axes with different excitation signals such as sine, sine sweep, random (PSD based) noise, time signal data recorded in the field on various test tracks, square wave signals or externally generated wavelets. The import of external data into the vibration control system is quick and easy via common file formats such as TXT, CSV, HDF, RPC, TDMS or UFF58.

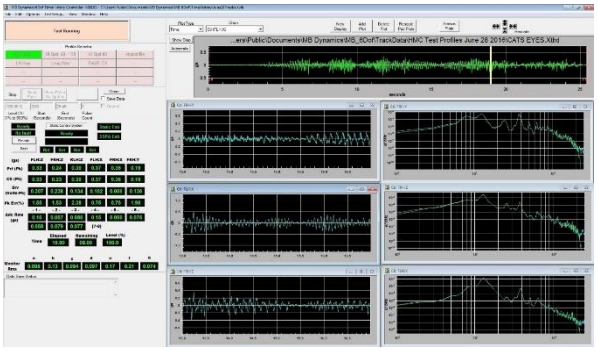

Figure 4: MB Millenium-MIMO multi-axis vibration control system for closed-loop control and monitoring of excitation in x-, y- and z-axis.

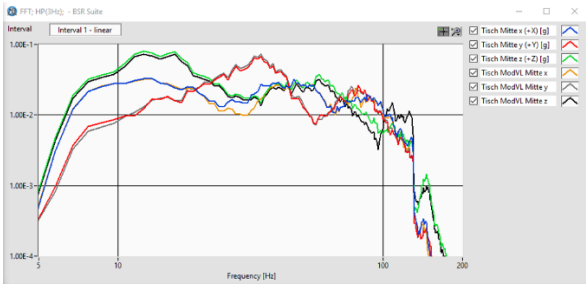

Figure 5: PSD spectra of the excitation signals in x-, y- and z-axis at different sensor positions on the magnesium vibration table (middle and front left), homogeneous excitation of the table at different sensor positions.

Precise and reproducible excitation in all three axes

The distortion-free excitation by the ***ALPHA*** shakers, the high stiffness of the magnesium vibration table and the precise, feedback multi-axis control result in an excellent reproduction of the desired excitation signals in all three axes. Remaining crosstalk between the individual excitation axes can be actively compensated and minimized by the multi-axis vibration control system if required.

Quiet operation! Ideal for Squeak & rattle testing

Even in case of simultaneous excitation in all three axes, our ***MATRIX 3D*** vibration tables are characterized by very low operating noise. The systems meet the requirements of different Squeak & Rattle test specifications regarding the maximum permissible operating noise and are therefore ideally suited for BSR testing on various components.

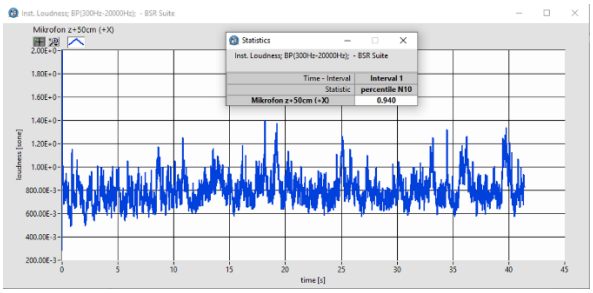

Figure 6: N10 loudness of 0.94 sone when simulating a typical cobblestone test track with an acceleration of 0.29gRMS in all three axes simultaneously.

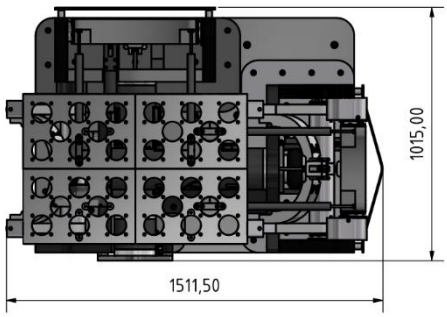

Figure 7: Compact dimensions of the MATRIX 3D-M

Compact design allows easy integration into acoustic rooms

The compact design and small footprint of ***MATRIX 3D*** vibration tables allows easy integration into acoustic rooms and test laboratories. The good accessibility of the magnesium vibration table facilitates the assembly of test specimens and test fixtures and the noise analysis during a running test.

MATRIX 3D
Vibration Tables

MB DYNAMICS
Sound & Vibration Testing Technology

Technical specifications:

***MATRIX 3D* Vibration Tables**			
	***MATRIX 3D* - M**	***MATRIX 3D* - L**	***MATRIX 3D* - XL**
Shakers built into the system	3x ALPHA 2025	3x ALPHA 2050	3x ALPHA 4050
Mounting surface	900mm *450mm	1800mm*600mm	1800mm*600mm OR 1800mm*900mm
Mounting grid pattern	M8 threaded inserts on 75mm*75mm grid pattern	M8 threaded inserts on 75mm*75mm grid pattern	M8 threaded inserts on 75mm*75mm grid pattern
Lever arm ratio	1:1	2:1	2:1
Maximum dynamic forces			
Sine	2000N peak /per axis	4000N peak / per axis	8000N peak / per axis
Random	1200N rms / per axis	2400N rms / per axis	4800N rms / per axis
Time History	4000N peak / per axis	8000N peak / per axis	16000N peak / per axis
Operating noise *			
Sound pressure level **	<35dB(A)	<38dB(A)	<40dB(A)
Time Varying Loudness ***	<1 Sone	<1,2 Sone	<1,5 Sone
Maximum displacement	25mm pk-pk	25mm pk-pk	25mm pk-pk
Maximum velocity	1m/s	1m/s	1m/s
Maximum acceleration	25m/s² pk	40m/s² pk	50m/s² pk
Frequency range	DC-200Hz	DC-200Hz	DC-200Hz
Maximum payload	100kg	200kg	300kg
Cross-Axis response ****	<10%	<10%	<10%
Overtravel protection	Yes	Yes	Yes
Overtemperature protection	Yes	Yes	Yes
Automatic load support	Yes	Yes	Yes
Integrated cooling	Yes, integrated quiet fans	Yes, integrated quiet fans	Yes, integrated quiet fans
Water cooling	Optional	Optional	Optional
Thermal barrier	Optional	Optional	Optional

* Measured at 70cm above the center of the mounting table when excited with typical cobblestone Squeak & Rattle test profiles in the frequency range from 5Hz to 100Hz at a vibration level of 0.3gRMS.

** A-weighted Sound Pressure Level, FAST (125ms), 100Hz to 20kHz

*** N10 Percentile Level, loudness according to DIN45631/A1, measured in accordance with GMW14011

**** Related to the RMS value of the accelerations in the frequency range from 5Hz-100Hz